Lucas Rendell N01384466

EML 3535C M/W 2pm

11/11/19

CAD Project 1 | Space Ship Assembly

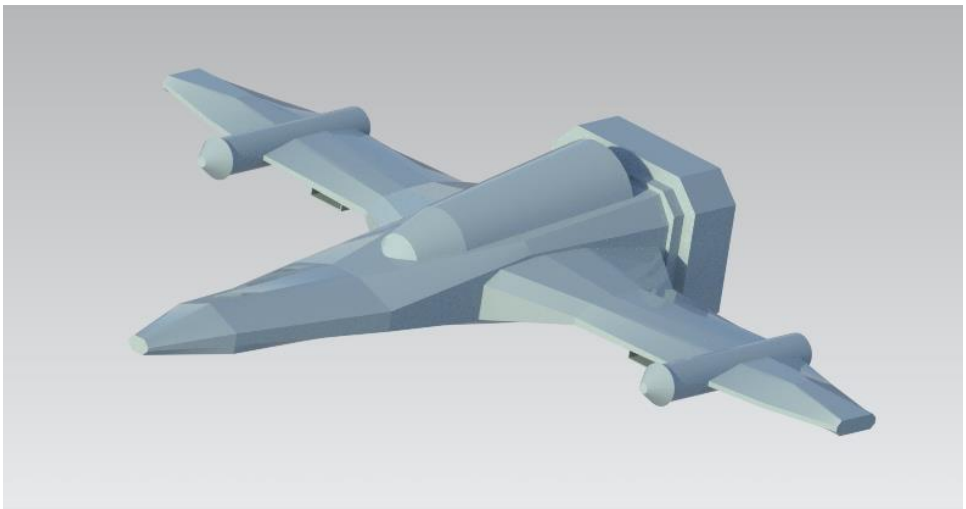

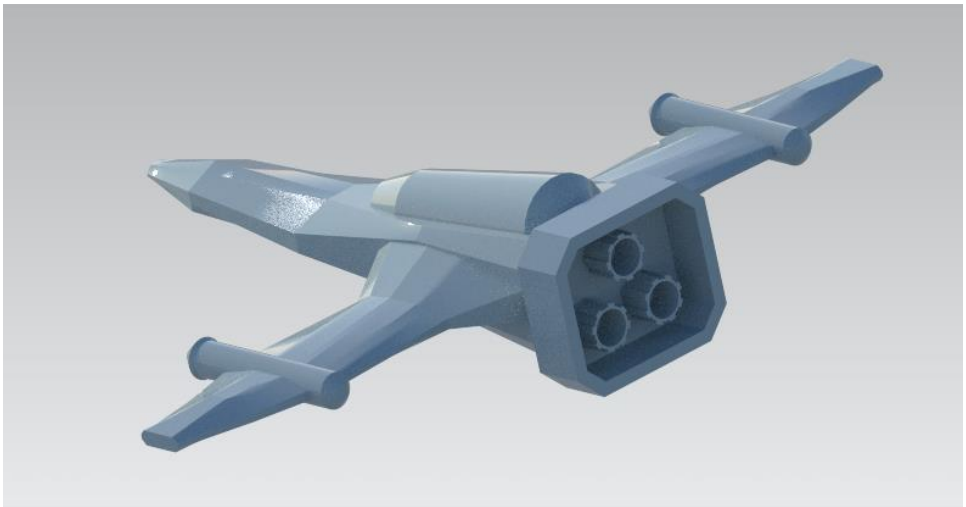

1. Assembly Parts and Creation

A. Chassis

Figure 1: Mirrored cross sections

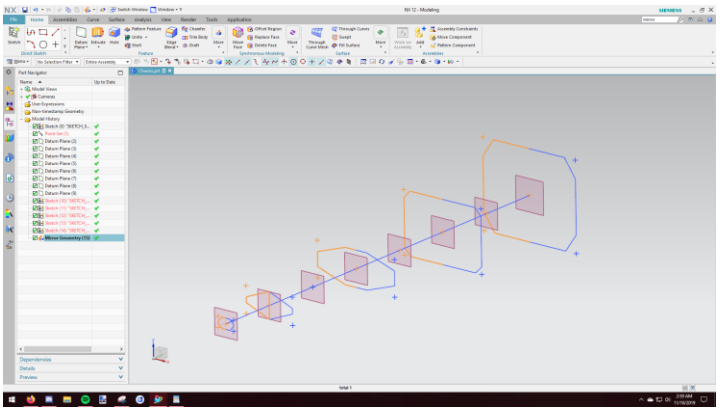

Figure 2: Sweep

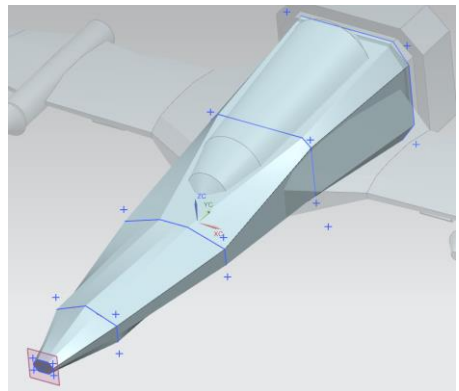

The chassis of the space ship was created with:

- **Swept:** Cross sections were connected with a swept command. No additional modifiers were used.
- **Mirror Geometry:** Sketches were mirrored on the Z-axis to keep symmetry consistent.
- **Fixed Assembly Constraint:** In order to make sure all the other parts were placed correctly in the final assembly; the main chassis was added in a fixed position.

B. Cockpit

The cockpit of the space ship was created with simple cones and cylinders. During the creation of the cockpit, there were times where a Unite boolean was used instead of calculating connecting dimensions.

- **Extrude & Unite (Boolean):** Some cylinders were sketches with a circle extruded with a unite to connect cones.

C. Engine

Figure 3: Non-manifold geometry

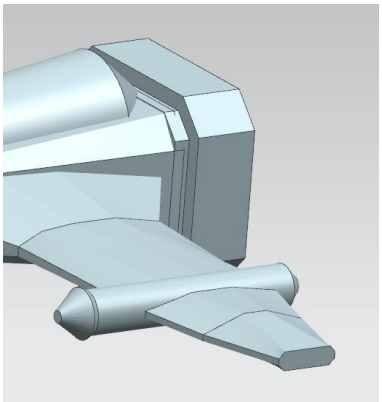

Figure 4: Scaling fix

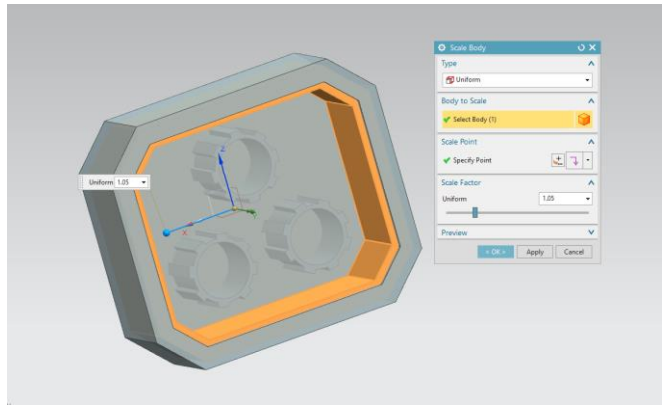

Figure 5: First pattern

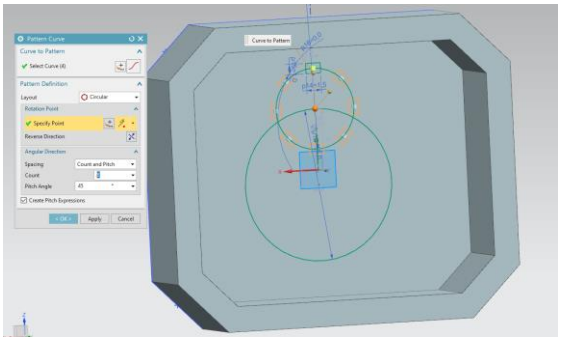

Figure 6: Second pattern

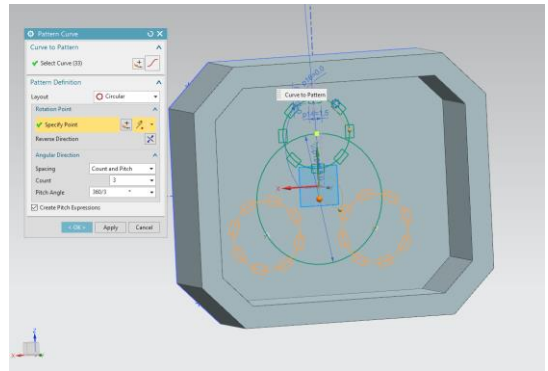

The engine of the space ship was created with:

- **3D Chamfers:** 3D chamfers were used on the extruded outline (Figure 3 and 4).
- **Scale:** In order to fix initial non-manifold geometry, the engine's outline was scaled up. This is seen in Figure 4.
- **Pattern & Revolve:** In order to create the exhaust shape, a first pattern used 8 squares in a revolve path. The angles were 360/8. A second pattern with a similar revolve path was used to create a triangular formation of exhausts.

D. Wings

Figure 7: The shell underneath the wing as well as the cross sections.

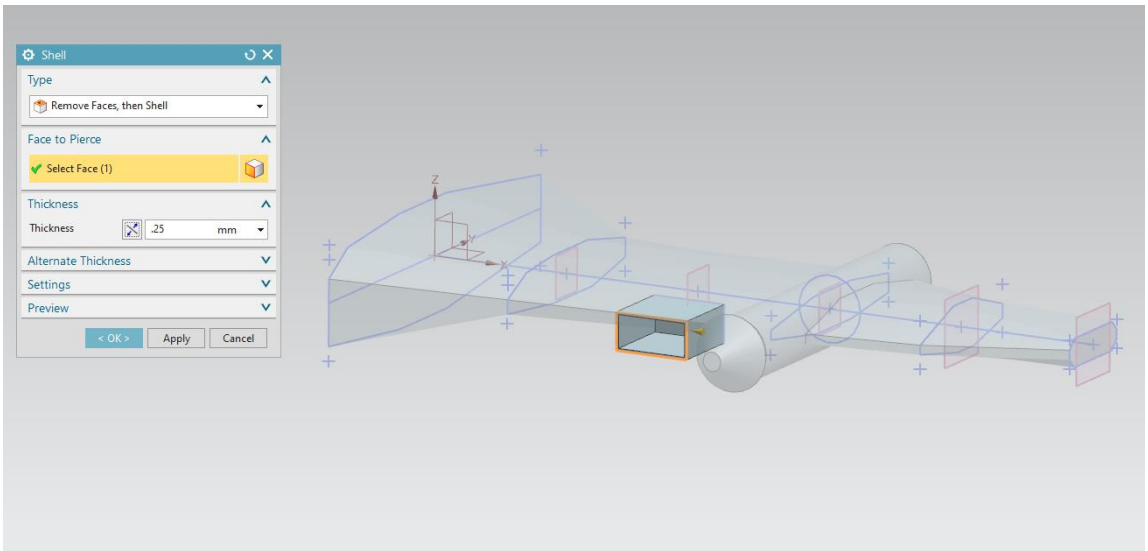

The wings of the space ship were created with:

- **Through Curves:** Similar the chassis of the space ship, the wing bodies were made with a through curves.
- **Shell:** The shell command was used to create small air intakes under the wings.
- **Mirror Assembly:** In order to rotate and mirror the second wing of the spaceship, a mirror to the assembly part was created.

2. Commands & Summary

Command name	What features used it	Described in section	Advanced options used in command
Extrude	Cockpit	1.B.i	Unite boolean
Boolean	Cockpit	1.B.i	
Revolve	Engine - Exhausts	1.C.iii	Angle: 360/3
3D Chamfer	Engine - Outline	1.C.i	
Pattern	Engine - Exhausts	1.C.iii	Angle: 360/8
Shell	Wings - Intake	1.D.ii	
Scale	Engine - Outline	1.C.ii	
Sweep	Chassis	1.A.i	
Through Curves	Wings	1.D.i	
Assembly Constraints	Chassis	1.A.iii	Fixed
	Wings - Mirror	1.D.iii	Mirror Assembly
Mirror Geometry	Chassis	1.A.ii	

Overall, this space ship assembly is ready for light-weight software prototyping and 3D printing. This model wasn't created with a life-scale consistent dimension in mind, but it could be rescaled.

Special Comments

This assembly turned out to be quite optimized with the low polygon count that it has, so I might import it as a full model into Unity3D. It would be a nice model for me to use in game/render prototyping.